SET-UP SHEET

XRAY T2

RACE	MSC Carpet Cup Round 6
TRACK	MK Eskil
NAME	Alexander Hagberg
CITY / COUNTRY	Eskilstuna / Sweden
CONTACT	alexander_hagberg@mail.com

DATE	TEMPERATURE / °F or °C	AIR	TRACK
26/01/2006			

QUALIFYING POSITION	BEST LAPTIME / sec	FINAL POSITION	RACE LENGTH / minutes
TQ	14.5	1st	5

TRACK CONDITION			
	[X] CARPET	[ ] ASPHALT	
	[X] TECHNICAL	[ ] MIXED	[ ] FAST
TRACTION	[ ] LOW	[X] MEDIUM	[ ] HIGH

FRONT	REAR
TRANSMISSION	
DIFFERENTIAL	
[ ] [ ] [ ] [ ] [ ] LOOSE MEDIUM TIGHT	[ ] [X] [ ] [ ] [ ] LOOSE MEDIUM TIGHT

ONE WAY DIFFERENTIAL	[X] YES	MIDDLE ONE WAY PULLEY	
SOLID ONE WAY DIFF.	[ ] YES	FIXED [X]	ONE-WAY [ ]
SOLID AXLE	[ ] YES		

PINION / T		SPUR GEAR / T	
FINAL DRIVE RATIO	0	ROLLOUT	0

FRONT		REAR
[ ] ALU [X] PLASTIC	SHOCKS	[ ] ALU [X] PLASTIC

XRAY SPRINGS

#308393	Super Soft	[ ]	YELLOW	[ ]	(D=1.4) 14 lb
#308384		[ ]	BLUE-GREEN	[ ]	(D=1.5) 15 lb
#308394	Soft	[ ]	WHITE	[ ]	(D=1.5) 17.5 lb
#308385		[ ]	LIGHT-BLUE	[ ]	(D=1.6) 20 lb
#308395	Soft Medium	[ ]	BLUE	[ ]	(D=1.6) 22.5 lb
#308386		[ ]	DARK-BLUE	[ ]	(D=1.7) 25 lb
#308396	Medium	[ ]	VIOLET	[ ]	(D=1.7) 28 lb
#308387		[ ]	LIGHT-PURPLE	[ ]	(D=1.8) 30 lb
#308397	Medium Hard	[ ]	PURPLE	[ ]	(D=1.8) 33 lb
#308388		[ ]	LIGHT-RED	[ ]	(D=1.9) 35 lb
#308398	Hard	[ ]	RED	[ ]	(D=1.9) 38 lb

Standard Silver	OTHER SPRING	Standard Gold
AE 35	OIL / W	AE 35
	LENGTH / mm	
	PRELOAD / mm	
100	REBOUND %	100
[X] YES [ ] NO	FOAM INSERTS	[X] YES [ ] NO
[ ] YES [X] NO	O-RING ON SHAFT	[ ] YES [X] NO

○ OPENED ● CLOSED — HOLES IN PISTON

1.4	ANTI-ROLL BAR (THICKNESS / mm)	1.4

Sorex 28	TIRES	Sorex 28
	DIAMETER / mm	
JB Foam	INSERTS	JB Foam
LRP	ADDITIVE	LRP

FRONT LEFT / FRONT RIGHT — TREATED AREA — REAR LEFT / REAR RIGHT

HUDY	WHEELS	HUDY
S [ ] M [X] H [ ]	HARDNESS	S [ ] M [X] H [ ]

MOTOR	LRP	ARMATURE	12X1	TIMING	7mm
		+ SPRING -			
		+ BRUSH FACE -			
		+ BRUSH COMP. -			

ESC	LRP QC2	BATTERIES	LRP VTEC 3700
BODY	PF Mazda 6	WING	Standard

COMMENTS

Additive 40 min rear and 10 min front. Very fast setup for this track. Car is very good with new tires, super stable with good steering, feels like the entire car is steering through the corner.

Best laptimes were on pace with 1:12 scale cars....
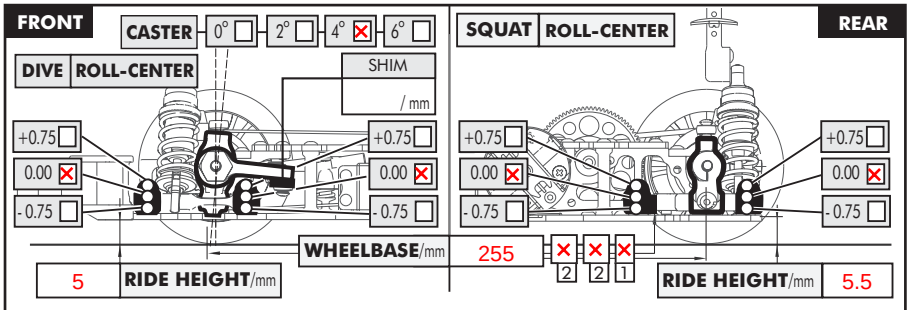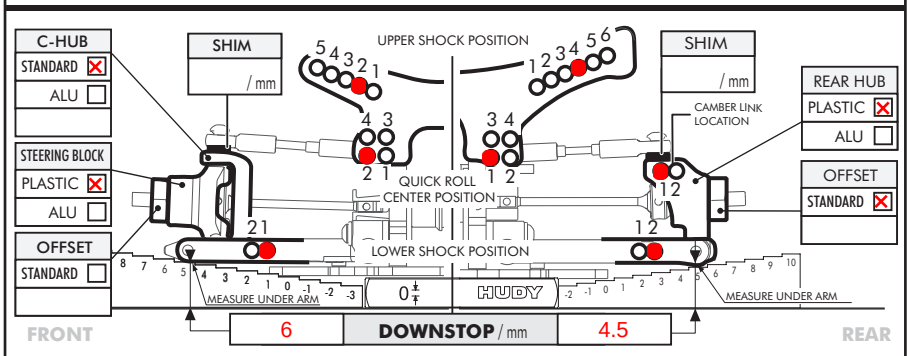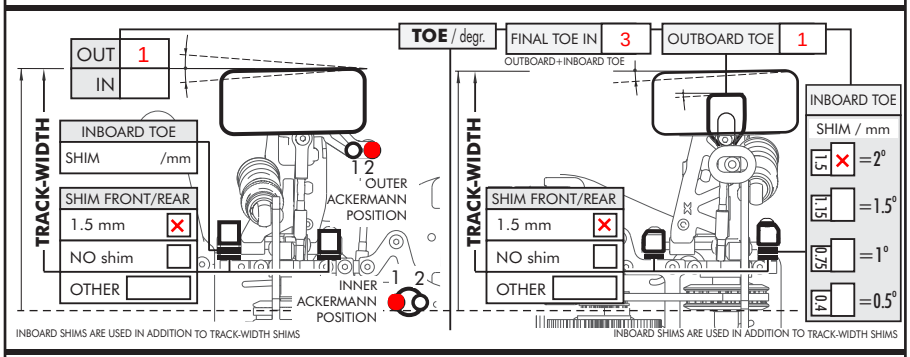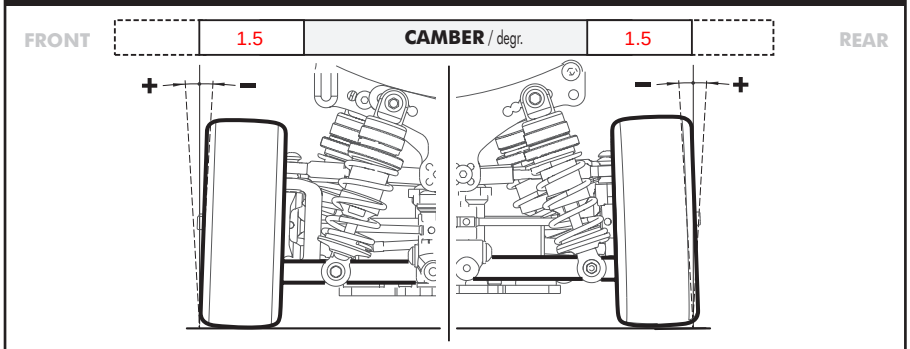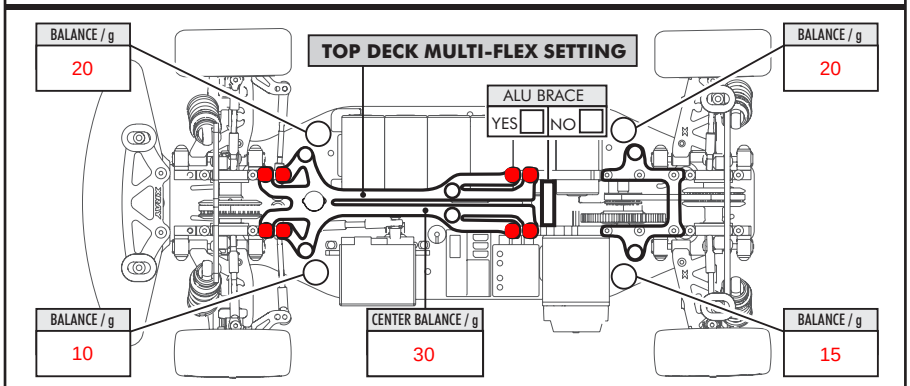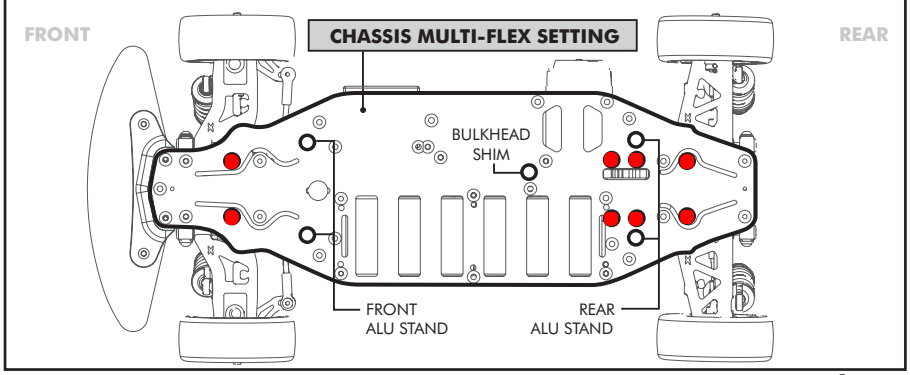
● [X] - APPLIED S-SOFT M-MEDIUM H-HARD